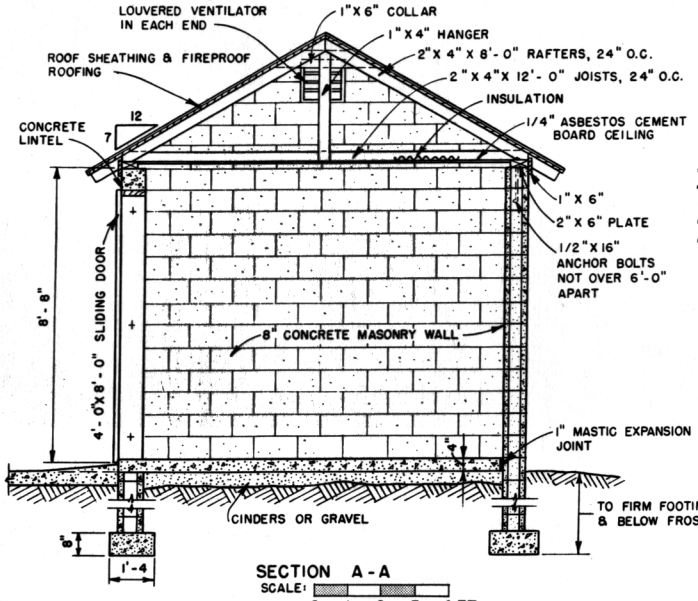

SECTION A-A
SCALE: 0 1 2 3 4 FT.

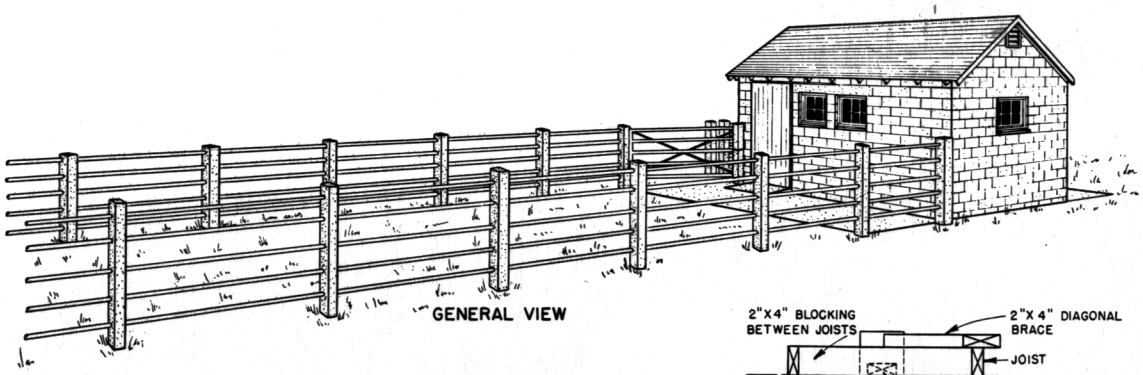

GENERAL VIEW

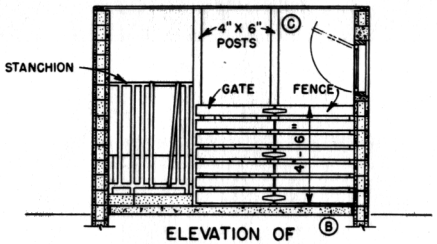

ELEVATION OF STANCHION & GATE
SCALE: 0 2 4 6 FT.

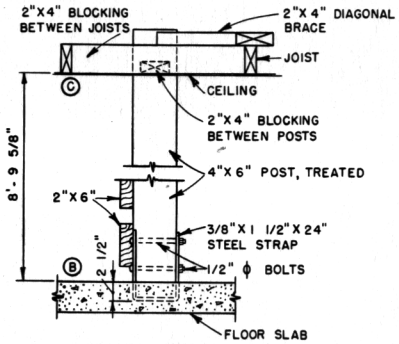

POST DETAIL
SCALE: 0 1 FT.

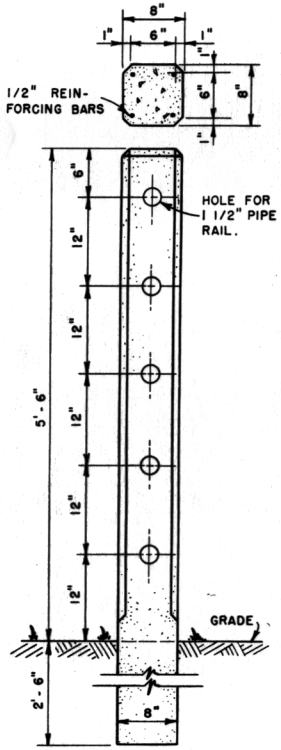

DETAIL OF CONCRETE POSTS
SCALE: 0 1 FT.

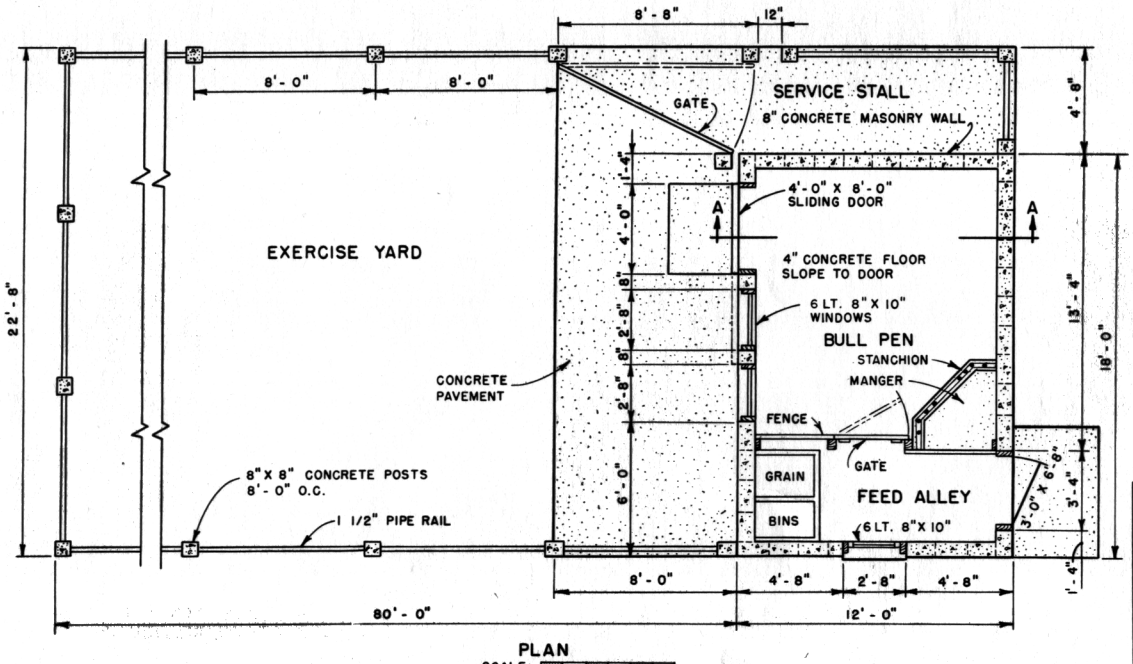

PLAN
SCALE: 0 2 4 6 FT.

NOTE

1. ALL LINTELS TO BE REINFORCED WITH TWO 1/2" ϕ RODS.
2. USE BRUSH FINISH ON PAVEMENT AND PEN FLOOR.

COOPERATIVE EXTENSION WORK IN
AGRICULTURE AND HOME ECONOMICS
DEPARTMENT OF AGRICULTURAL ENGINEERING
UNIVERSITY OF MARYLAND
AND
UNITED STATES DEPARTMENT OF AGRICULTURE COOPERATING

BULL PEN & PADDOCK
MASONRY CONSTRUCTION

VA.	EX. 5760	SHEET 1 OF 1