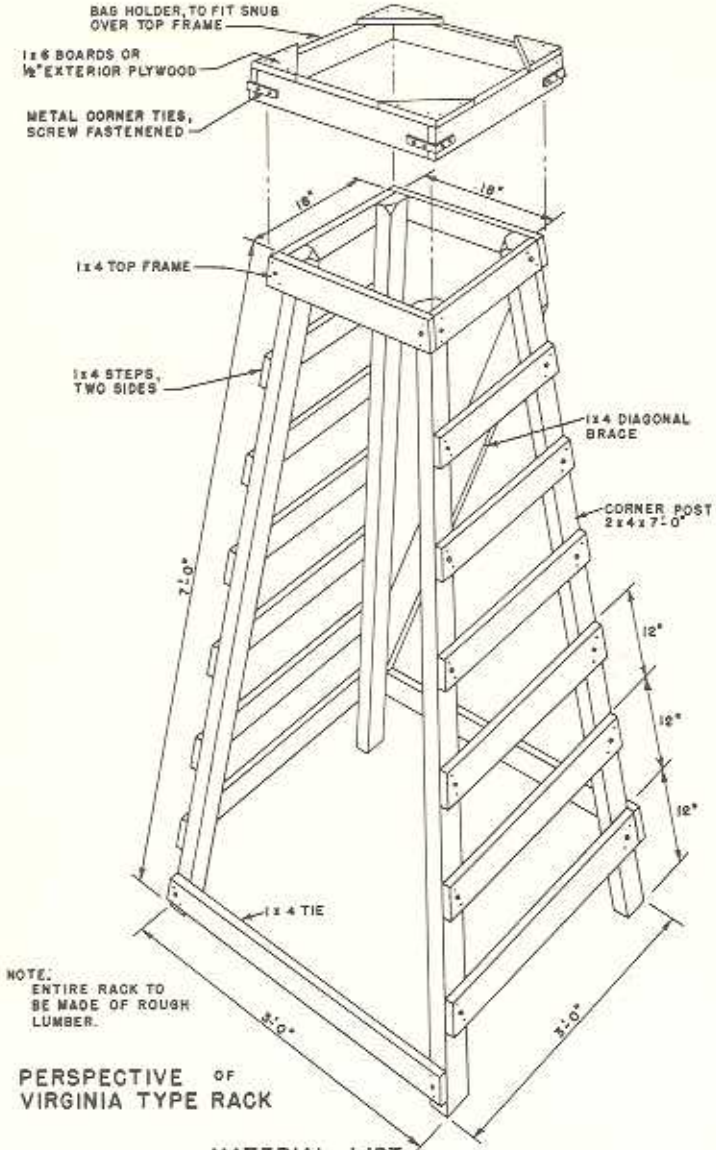

NOTE:
ENTIRE RACK TO BE MADE OF ROUGH LUMBER.

PERSPECTIVE OF VIRGINIA TYPE RACK

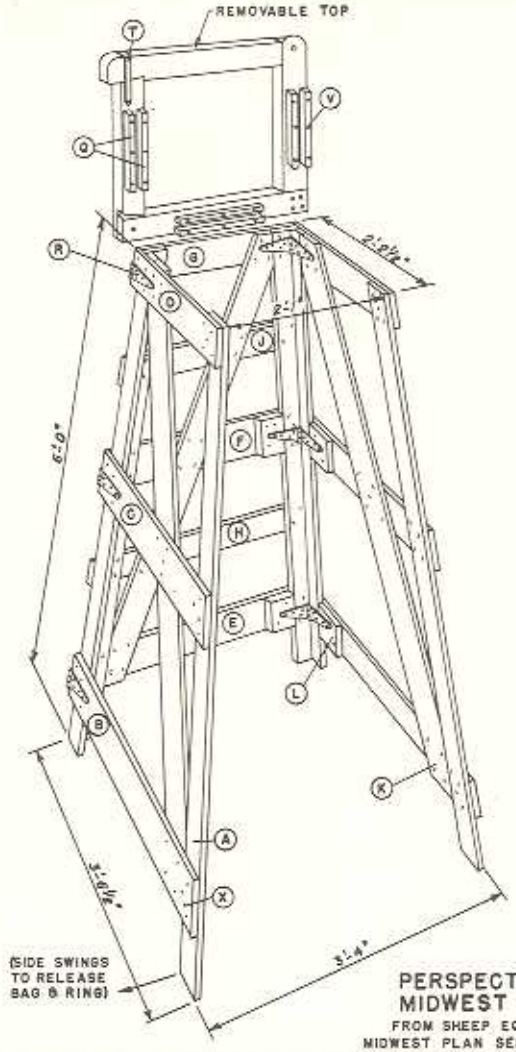

PERSPECTIVE OF MIDWEST TYPE RACK
FROM SHEEP EQUIPMENT PLANS
MIDWEST PLAN SERVICE, AMES, IOWA.

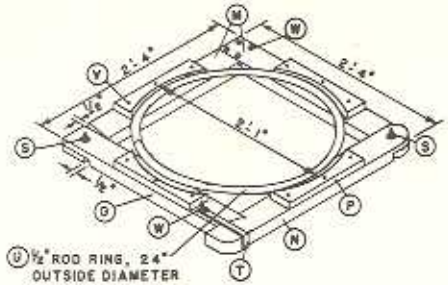

REMOVABLE TOP

CUTTING LIST

ITEM	DESCRIPTION	QUANTITY
A	1 x 4 x 6'-0" CORNER POSTS	6
B	1 x 6 x 3'-6½" BOTTOM TIE	2
C	1 x 6 x 2'-11" MIDDLE TIE	2
D	1 x 6 x 2'-4" TOP TIE OR FRAME	2
E	1 x 6 x 3'-5" BOTTOM TIE OR STEP	1
F	1 x 6 x 2'-10" MIDDLE TIE OR STEP	1
G	1 x 6 x 2'-3" TOP TIE OR FRAME	1
H	1 x 4 x 2'-11" INTERMEDIATE STEP	1
J	1 x 4 x 2'-4" INTERMEDIATE STEP	1
K	1 x 4 x 6'-0" DIAGONAL BRACES	3
L	1 x 6 x 4" HINGE BLOCKING	4
M	2 x 4 x 2'-4" HARDWOOD FRAME	2
N	2 x 4 x 2'-6" HARDWOOD FRAME	1
O	2 x 4 x 2'-1" HARDWOOD FRAME	1
P	1 x 3 x 12" HARDWOOD (BAG HOLDER)	4
Q	1 x 1 x 12" HARDWOOD (CLAMPS)	6
R	6" STRAP HINGES (WITH SCREWS)	6
S	⅜" x 2 ½" BOLT	2
T	5/16" x ½" x 18" STRAP	1
U	½" x 6'-3½" ROD	1
V	1¾" - NO. 8 FLATHEAD WOOD SCREWS	30
W	¼" x 2 ½" BOLT	6
X	6d (RING OR SCREW SHANK) NAILS	1 LB.

NOTE: ENTIRE RACK TO BE MADE OF ROUGH LUMBER.

MATERIAL LIST

ITEM	SIZE	QUANTITY
CORNER POSTS	2 x 4 x 14'-0"	2
BAG HOLDER BRACE	1 x 6 x 1'-0"	1
STEPS (TWO SIDES)	1 x 4 x 8'-0"	4
DIAGONAL BRACE AND BOTTOM TIES	1 x 4 x 12'-0"	1
BAG HOLDER AND TOP FRAME	1 x 4 x 14'-0"	1
METAL CORNER TIES		4
WOOD SCREWS (FLATHEAD)	1" - NO. 10	16
	2" - NO. 10	38
NAILS (RING OR SCREW SHANK)	8d	1 LB.

USE OF THE WOOL PACKING RACK

FIRST, PLACE THE BAG IN THE RACK WITH THE MOUTH OF THE BAG FOLDED DOWN OVER THE TOP OF THE FRAME ABOUT 6" (IT MAY BE NECESSARY TO CUT THE SEAM OF SMALL-MOUTH BAGS ABOUT 4").

NEXT, PLACE THE BAG HOLDER DOWN OVER THE TOP OF THE RACK TO HOLD THE BAG SECURELY.

AFTER SHEARING EACH SHEEP, TIE THE FLEECE WITH PAPER TWINE. PACK THE FLEECES INTO THE BAG IN LAYERS OF 4 OR 5 BY CLIMBING INTO THE BAG AND TRAMPING THE WOOL.

WHEN THE BAG IS FILLED AND READY TO BE REMOVED PLACE A BOARD UNDER IT AND RAISE SLIGHTLY. THIS WILL RELEASE THE PRESSURE AT THE TOP SO THE BAG WILL NOT TEAR WHEN THE BAG HOLDER IS REMOVED. CAPACITY OF THE BAG IS ABOUT 200 POUNDS.

*DETAILS OF A WOOL BOX USED FOR TYING FLEECE - SEE PLAN EX. 5805

COOPERATIVE EXTENSION WORK IN
AGRICULTURE AND HOME ECONOMICS
DEPARTMENT OF AGRICULTURAL ENGINEERING
UNIVERSITY OF MARYLAND
AND
UNITED STATES DEPARTMENT OF AGRICULTURE COOPERATING

WOOL PACKING RACKS

USDA '60 | EX. 5911 | SHEET 1 OF 1