ERECTION

ASSEMBLE FRAME, TARP & #9 GA. WIRE 2'-0"x2'-0" GRID. LOCATE (±1") POSTS & SET FOR DESIRED SLOPE OF TARP. LOOSELY CLAMP CAPS ON POSTS. SET TARP & FRAME ON CAPS, BOLT PIPE FRAME TO CAPS, THEN PULL CAP DOWN ON POST & TIGHTEN CLAMP.
CHECK TARP DIMENSIONS UNDER TENSION WHILE WARM BEFORE WELDING FIRST EXPERIMENTAL FRAME TO 16'-6". LEAVE NO SHARP KINKS IN NO. 9 WIRE GRID TO INJURE TARP.

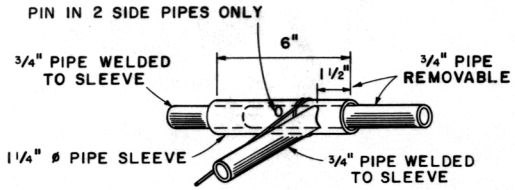

DETAIL "B"

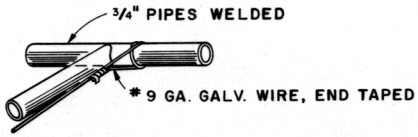

DETAIL "C"

ISOMETRIC VIEWS

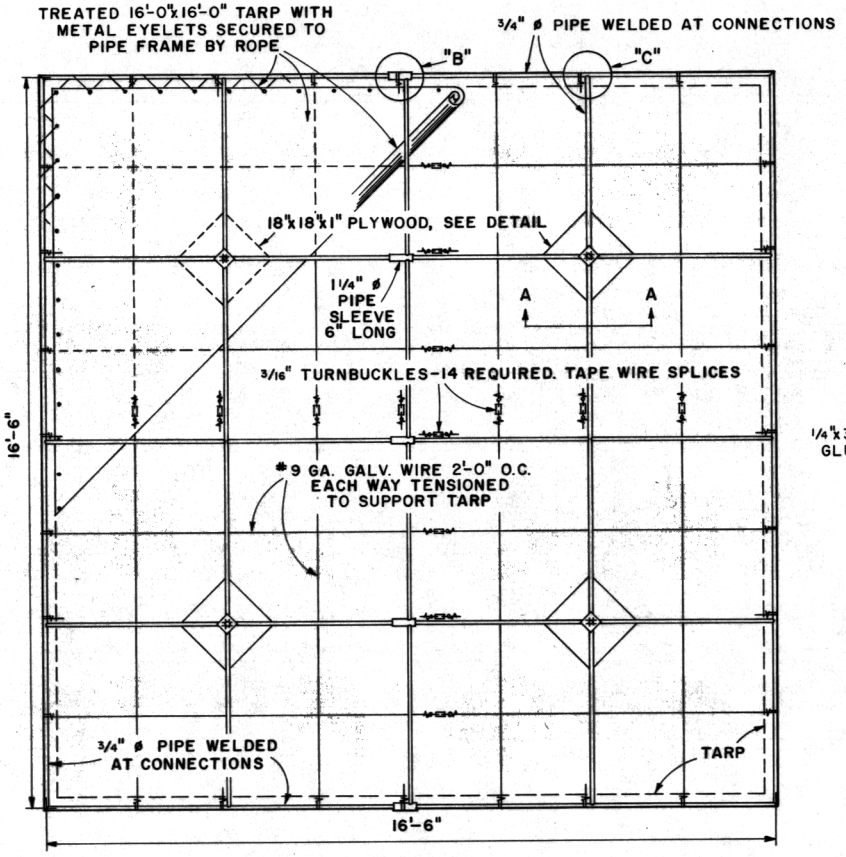

PLAN OF FRAME

12" 6" 0 1' 2'

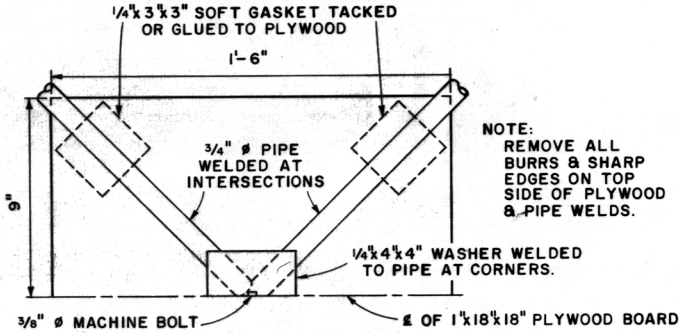

HALF PLAN-PLYWOOD

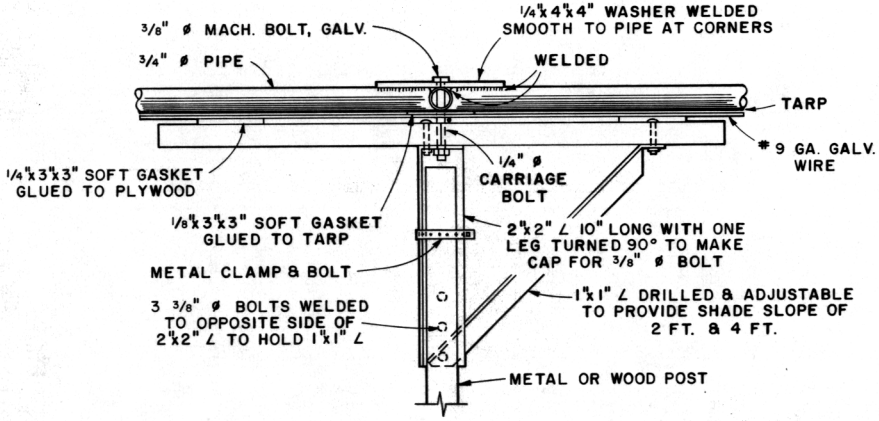

SECTION A-A

6" 5" 4" 3" 2" 1" 0

COOPERATIVE EXTENSION WORK IN AGRICULTURE AND HOME ECONOMICS

AND UNITED STATES DEPARTMENT OF AGRICULTURE COOPERATING

TARP HOG SHADE

USDA	'76	6257	SHEET 1 OF 1